NMRV安装尺寸 Mounting dimensions

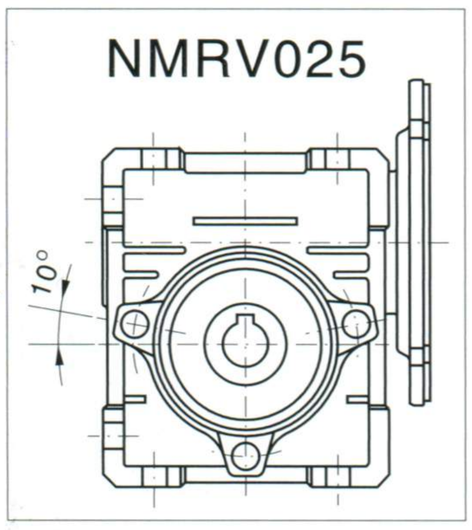

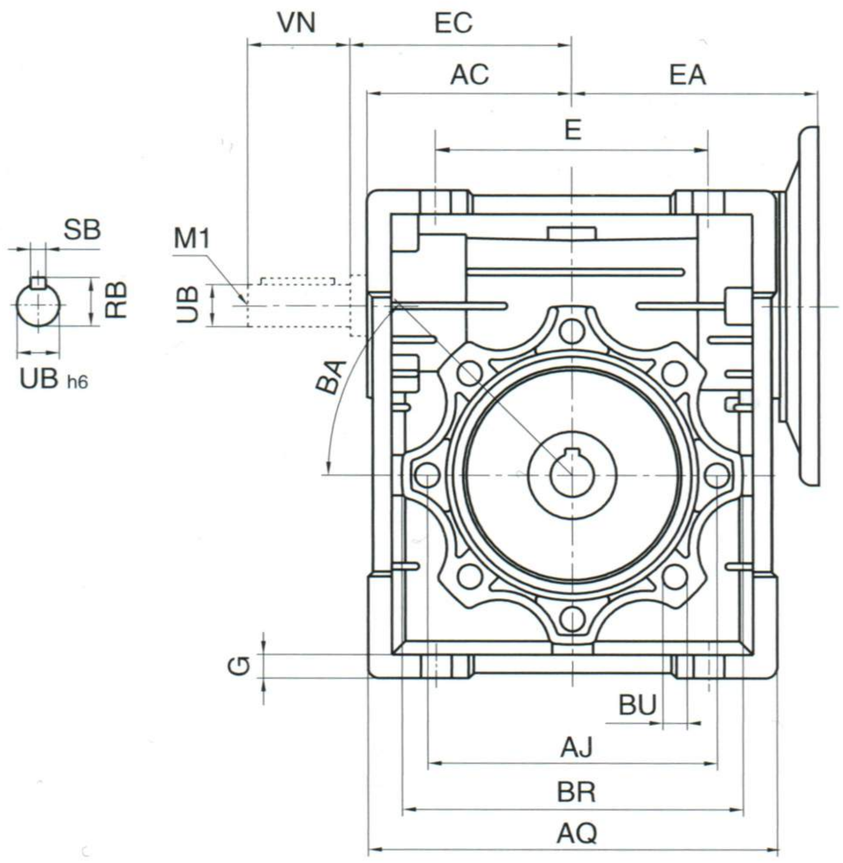

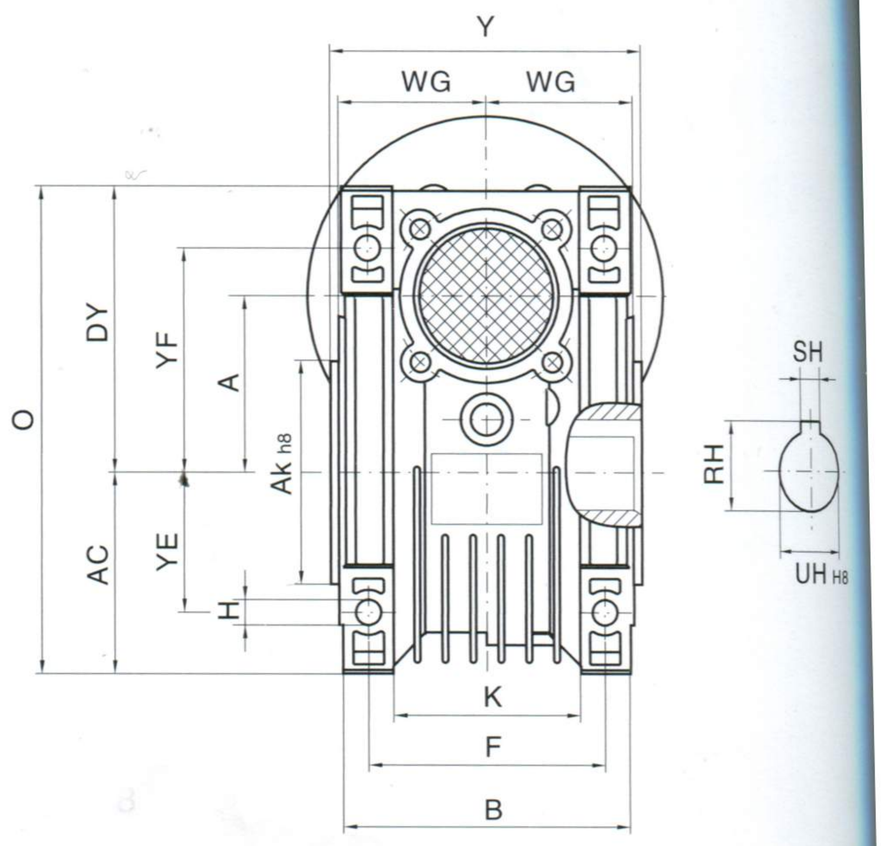

	025	030	040	050	063	075	090	110	130	150
A	25	30	40	50	63	75	90	110	130	150
AC	35	40	50	60	72	86	103	127.5	147.5	170
AJ	55	65	75	85	95	115	130	165	215	215
AK	45	55	60	70	80	95	110	130	180	180
AQ	70	80	100	120	144	172	206	252	292	340
B	–	56	71	85	103	112	130	144	155	185
BA	10°	0°	45°	45°	45°	45°	45°	45°	45°	45°
BR	65	75	87	100	110	140	160	200	250	250
BU	ϕ6.5(n.3)	M6x11(n.4)	M6x8(n.4)	M8x10(n.4)	M8x14(n.8)	M8x14(n.8)	M10x18(n.8)	M10x18(n.8)	M12x21(n.8)	M12x21(n.8)
DY	48	57	71	84	102	119	135	167.5	187.5	230
E	45	54	70	80	100	120	140	170	200	240
EA	45	63	71	80	95	112.5	130	160	180	210
EC	–	45	53	64	75	90	108	135	155	175
F	34	44	60	70	85	90	100	115	120	145
G	5	5.5	6.5	7	8	10	11	15	15	18
H	6	6.5	7	8.5	8.5	11	13	14	16	18
K	22	32	43	49	67	72	74	–	–	–
M1	–	–	–	M6	M6	M8	M8	M10	M10	M12
O	83	97	121	144	174	205	238	295	335	400
RB	–	10.2	12.5	16	21.5	27	27	31	33	38
RH	12.8	16.3	20.8	28.3	28.3	31.3	38.3	45.3	48.8	53.8
SB	–	3	4	5	6	8	8	8	8	10
SH	4	5	6	8	8	8	10	12	14	14
UB	–	9	11	14	19	24	24	28	30	35
UH	11	14	18	25	25	28	35	42	45	50
VN	–	20	23	30	40	50	50	60	80	80
WG	22.5	29	36.5	43.5	53	57	67	74	81	96
Y	50	63	78	92	112	120	140	155	170	200
YE	22	27	35	40	50	60	70	85	100	120
YF	35.5	44	55	64	80	93	102	125	140	180
重量(kg)	0.7	1.3	2.3	3.5	6.2	9	13	35	48	84

http://www.pdfdo.com
PDFdo image to PDF trial

输出法兰安装尺寸 Output flange mounting dimensions

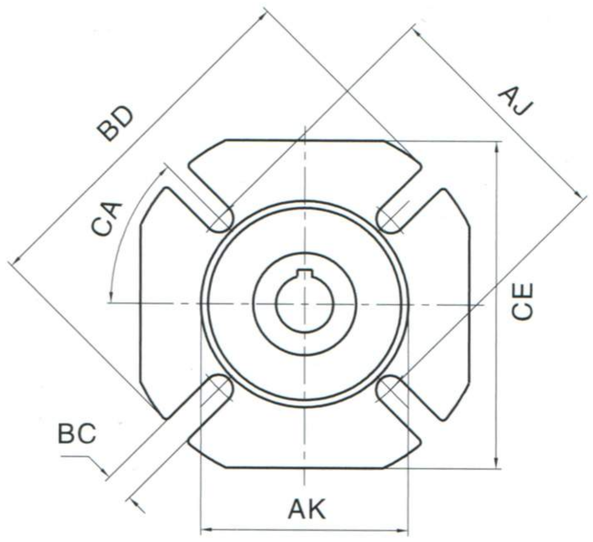

A向

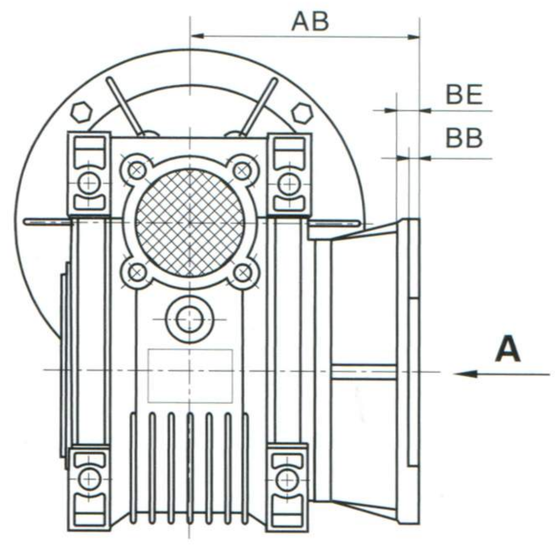

	025	030	040	050	063	075	090	110	130	150
AB	45	54.5	67	90	82	102	111	131	140	155
AJ	55	68	80	85	150	165	175	230	255	255
AK	40	50	60	70	115	130	152	170	180	180
BB	3	4	4	5	6	6	6	6	6	7
BD	75	80	110	125	180	200	210	280	320	320
BE	6	6	7	9	10	13	13	15	15	15
BC	6.5(n.4)	6.5(n.4)	9(n.4)	11(n.4)	11(n.4)	14(n.4)	14(n.4)	ϕ14(n.8)	ϕ16(n.8)	ϕ16(n.8)
CA	45°	45°	45°	45°	45°	45°	45°	45°	22.5°	22.5°
CE	70	70	95	110	142	170	200	260	290	290

注意: BC尺寸110~150为 ϕ 圆孔

http://www.pdfdo.com
PDF-do Image to PDF Trial

蜗杆双输入尺寸 Extension worm shaft dimensions

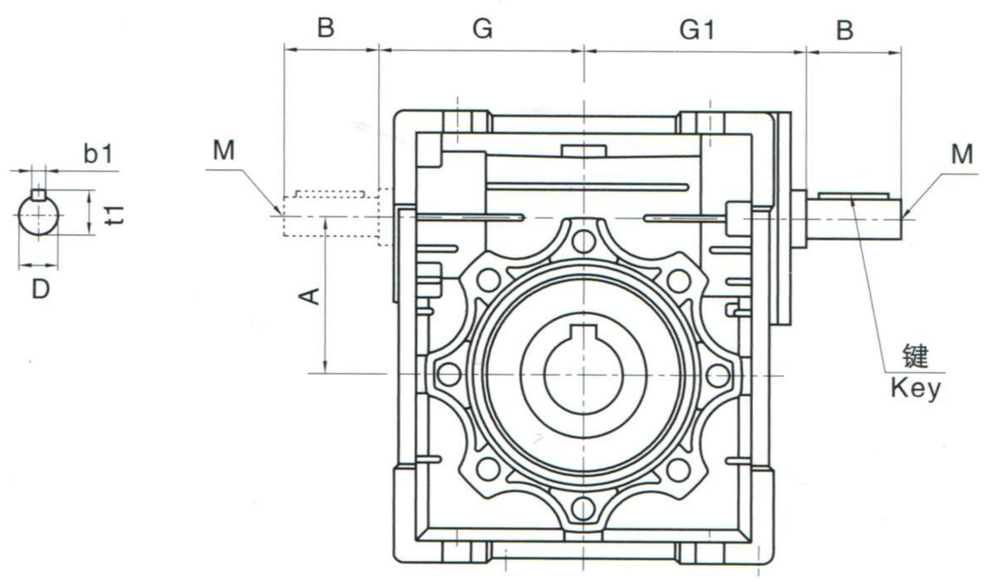

NMRV	B	D(j6)	G	G1	M	b1	t1	输入轴平键	
								规格	长度
030	20	9	45	50	–	3	10.2	3×3	15
040	23	11	53	61	–	4	12.5	4×4	20
050	30	14	64	74	M6	5	16	5×5	25
063	40	19	75	90	M6	6	21.5	6×6	35
075	50	24	90	105	M8	8	27	8×7	45
090	50	24	108	125	M8	8	27	8×7	45
110	60	28	135	142	M10	8	31	8×7	55
130	80	30	155	162	M10	8	33	8×7	70
150	80	35	175	195	M12	10	38	10×8	70

4. 安 装 尺 寸
Mounting dimensions

单级蜗杆减速机 Single Step Worm Gear Reducer

电机输入法兰 Motor Input Flange

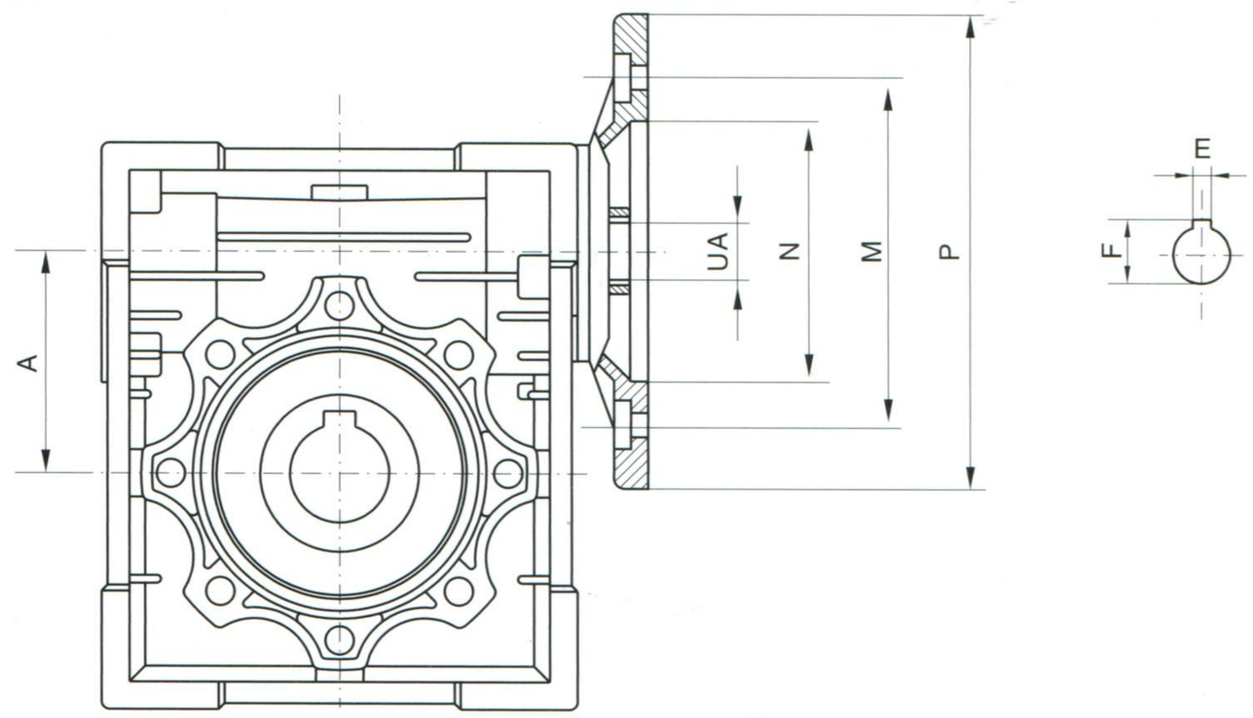

中心距 Center Distance A	电机法兰 Motor Flange						输入轴孔直径UA The Hole Diameter of Shaft 传动比 i Transmission Ratio										
	PAM IEC	N	M	P	E	F	7.5	10	15	20	25	30	40	50	60	80	100
NMRV025	56B14	50	65	80	3	10.4	9	9	9	9	–	9	9	9	9	–	–
NMRV030	63B5	95	115	140	4	12.8	11	11	11	11	11	11	11	11	–	–	–
	63B14	60	75	90													
	56B5	80	100	120	3	10.4	9	9	9	9	9	9	9	9	9	9	–
	56B14	50	65	80													
NMRV040	71B5	110	130	160	5	16.3	14	14	14	14	14	14	14	–	–	–	–
	71B14	70	85	105													
	63B5	95	115	140	4	12.8	11	11	11	11	11	11	11	11	11	11	11
	63B14	60	75	90													
	56B5	80	100	120	3	10.4	–	–	–	–	–	–	–	9	9	9	9
NMRV050	80B5	130	165	200	6	21.8	19	19	19	19	19	19	–	–	–	–	–
	80B14	80	100	120													
	71B5	110	130	160	5	16.3	14	14	14	14	14	14	14	14	14	14	–
	71B14	70	85	105													
	63B5	95	115	140	4	12.8	–	–	–	–	–	–	11	11	11	11	11
NMRV063	90B5	130	165	200	8	27.3	24	24	24	24	24	24	–	–	–	–	–
	90B14	95	115	140													
	80B5	130	165	200	6	21.8	19	19	19	19	19	19	19	19	19	–	–
	80B14	80	100	120													
	71B5	110	130	160	5	16.3	–	–	–	–	–	–	14	14	14	14	14
	71B14	70	85	105													
NMRV075	100/112B5	180	215	250	8	31.3	28	28	28	–	–	–	–	–	–	–	–
	100/112B14	110	130	160													
	90B5	130	165	200	8	27.3	24	24	24	24	24	24	24	–	–	–	–
	90B14	95	115	140													
	80B5	130	165	200	6	21.8	–	–	–	19	19	19	19	19	19	19	19
	80B14	80	100	120													
NMRV090	100/112B5	180	215	250	8	31.3	28	28	28	28	28	28	–	–	–	–	–
	100/112B14	110	130	160													
	90B5	130	165	200	8	27.3	24	24	24	24	24	24	24	24	24	–	–
	90B14	95	115	140													
	80B5	130	165	200	6	21.8	–	–	–	–	–	–	19	19	19	19	19
	80B14	80	100	120													
NMRV110	132B5	230	265	300	10	41.1	38	38	38	38	–	–	–	–	–	–	–
	100/112B5	180	215	250	8	31.3	28	28	28	28	28	28	28	28	28	–	–
	90B5	130	165	200	8	27.3	–	–	–	–	24	24	24	24	24	24	24
NMRV130	132B5	230	265	300	10	41.1	38	38	38	38	38	38	38	–	–	–	–
	100/112B5	180	215	250	8	31.3	–	–	–	–	28	28	28	28	28	28	28
NMRV150	160B5	250	300	350	12	45.3	42	42	42	42	42	–	–	–	–	–	–
	132B5	230	265	300	10	41.3	–	–	–	38	38	38	38	38	38	38	–
	100/112B5	180	215	250	8	31.3	–	–	–	–	–	–	–	–	28	28	28

http://www.pdfdo.com
PDFdo Image to PDF Trial

附件 Accessories

http://www.pdfdo.com
PDFdo Image to PDF Trial

单(AS)双出轴(AB)尺寸 Single & Double Output shaft dimensions

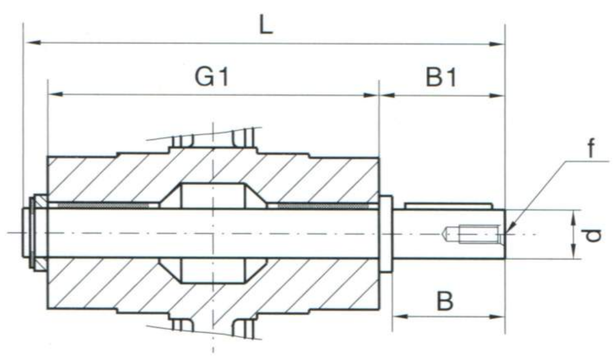

AS

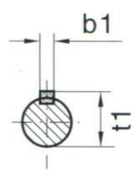

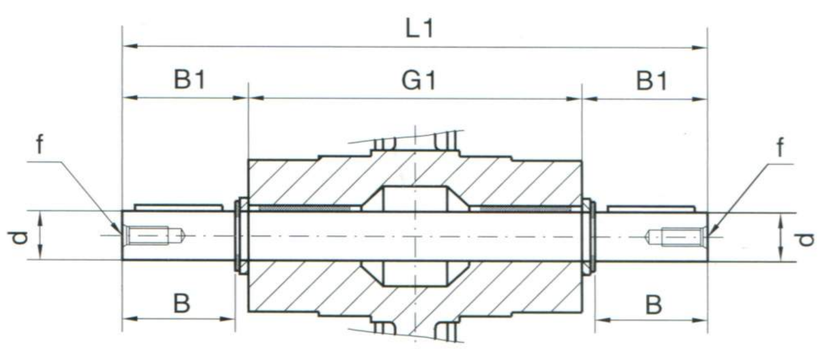

AB

NMRV	d	B	B1	G1	L	L1	f	b1	t1
025	11g6 (9)	23 (25)	25.5 30	50	81 (85.5)	101	–	4 (3)	12.5 (10.2)
030	14 g6	30	32.5	63	102	128	M6	5	16
040	18 h6	40	43	78	128	164	M6	6	20.5
050	25 h6	50	53.5	92	153	199	M10	8	28
063	25 h6	50	53.5	112	173	219	M10	8	28
075	28 h6	60	63.5	120	192	247	M10	8	31
090	35 h6	80	84.5	140	234	309	M12	10	38
105	42 h6	80	84.5	155	249	324	M16	12	45
110	42 h6	80	84.5	155	249	324	M16	12	45
130	45 h6	80	85	170	265	340	M16	14	48.5
150	50 h6	82	87	200	297	374	M16	14	53.5

◎ 非标产品，下单时须注明要求 Only on reques.t

防护罩 (D) Protective cover

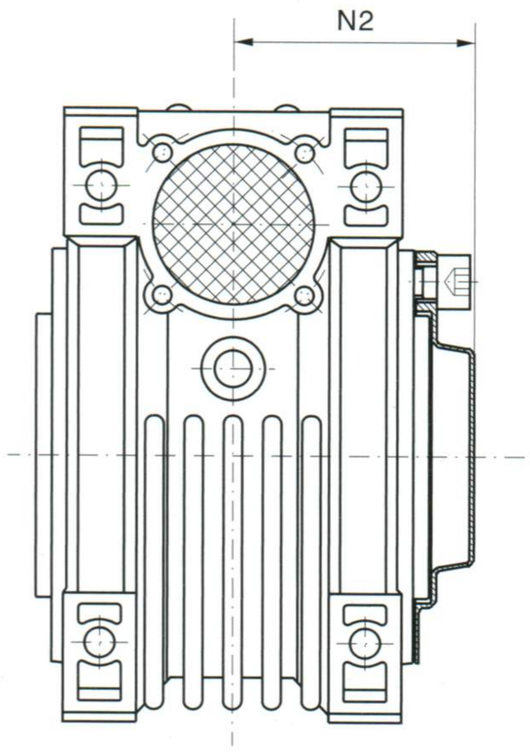

NMRV	N2
030	42
040	50
050	58
063	69
075	74
090	86
110	94
130	102
150	117

扭力臂(E) Torque arm

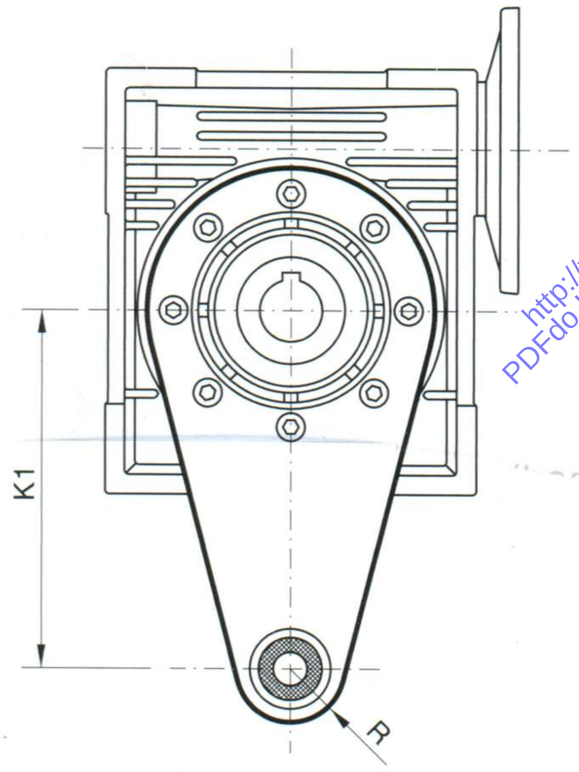

http://www.pdfdo.com
PDFdo Image to PDF Trial

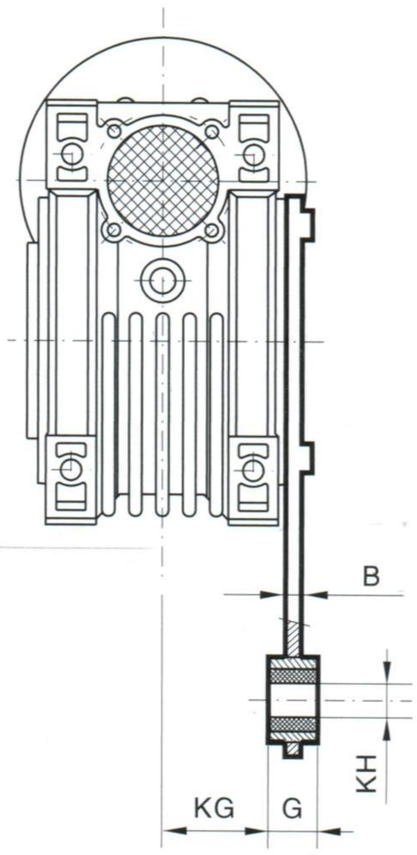

NMRV	K1	R	KG	G	KH	B
025	70	15	17.5	14	8	4
030	85	15	24	14	8	4
040	100	18	31.5	14	10	4
050	100	18	38.5	14	10	4
063	150	18	49	14	10	6
075	200	30	47.5	25	20	6
090	200	30	57.5	25	20	6
105	250	35	62	30	25	6
110	250	35	62	30	25	6
130	250	35	69	30	25	6
150	250	35	84	30	25	6